MODEL: AG-7000-CA-DP

Rail Detail

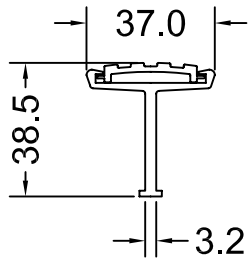

Plan View Of Grille

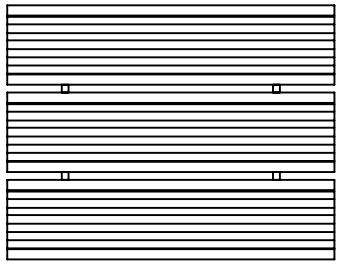

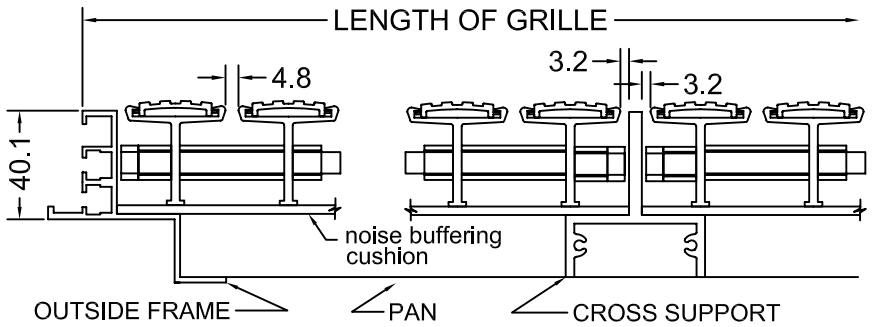

SECTION Y-Y

SECTION W-W

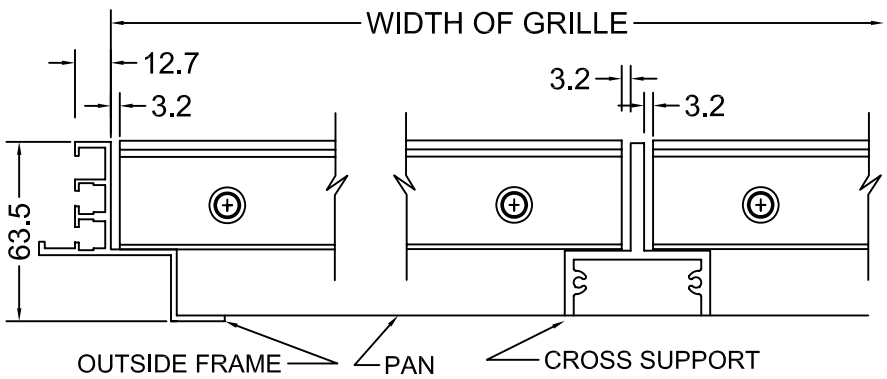

SECTION X-X

SECTION Z-Z

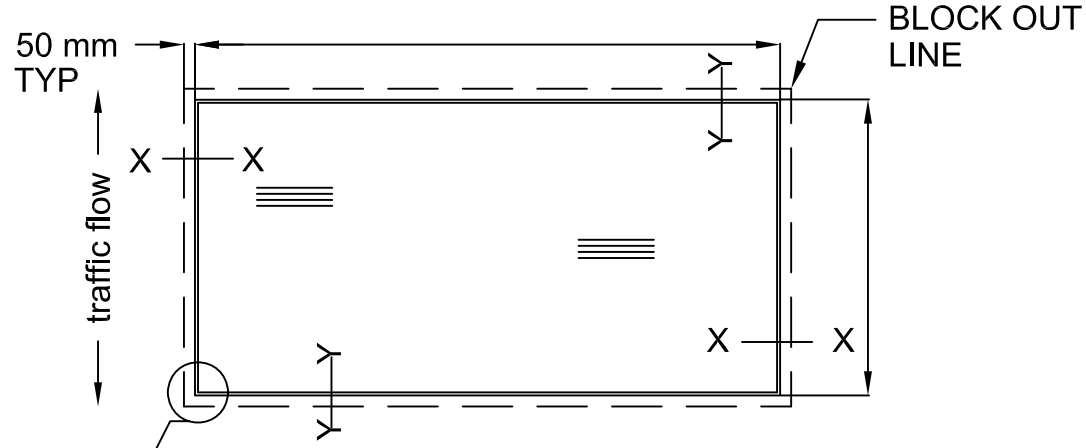

(NTS) DETAIL 1

Quantity:

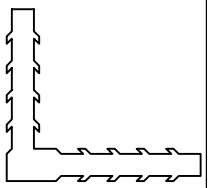

ASSEMBLY CLIP

DETAIL 1

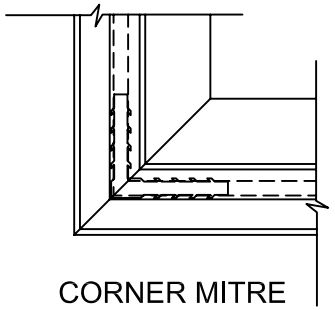

CORNER MITRE ASSEMBLY

DETAIL 2

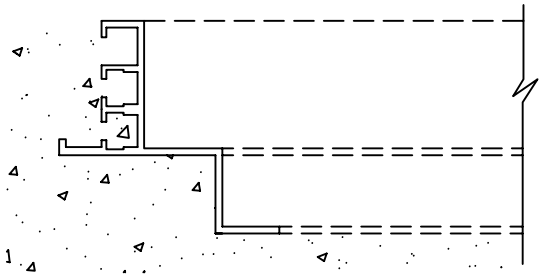

CROSS SUPPORT ASSEMBLY

GRILLES

Material : Aluminium 6061-T6
Assembly : 5/16" Steel rods
1/2" Aluminum spacers

Finish Options :
- ☐ Mill
- ☐ Clear anodized
- ☐ Bronze anodized

FRAMES Type: DP

Material : Aluminum 6061-T6
Assembly : Field installed with corner clips

Finish Options:
- ☐ Mill
- ☐ Clear anodized
- ☐ Bronze anodized

Pan Options
- ☐ 20G.Gal.steel
- ☐ 16G.Aluminum
- ☐ 20G.Stainless steel

Assembly

Factory installed to inside of frame pocket

Accessories
- ☐ Drain
- ☐ Hinge
- ☐ Lock down

Project:	Sheet:	File #	Revision Record:	No.	By:	Date:	Approved:	
Architect:	of							
Customer:	Date:	P.O.						
Rep.:								

MCGILL
1734 Orangebrook Court
Pickering, Ont.,L1W 3G8,Canada
Tel: 905-420-0485 / 1-888-624-4557
Fax: 905-420-4564 / 1-888-624-4558
engineering @ the-mcgill-group.com
http://www.the-mcgill-group.com