MODEL: AG-5000-BF-DP

Rail Detail

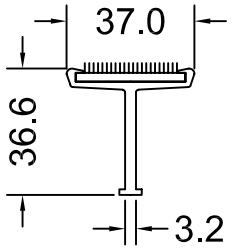

Plan View Of Grille

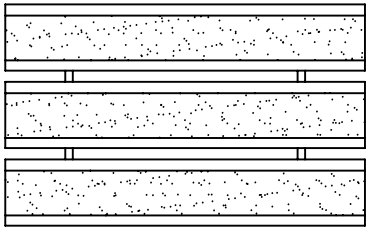

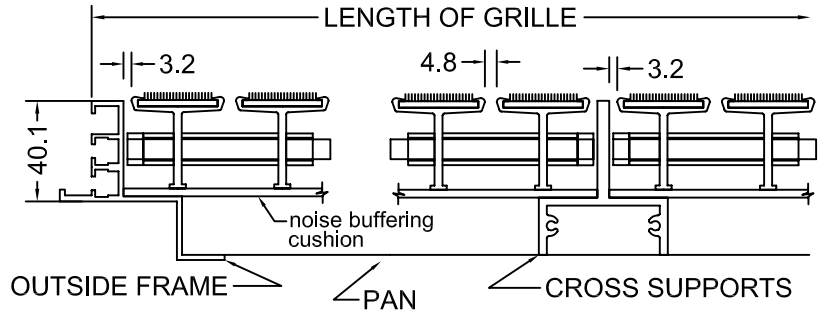

SECTION Y-Y

SECTION W-W

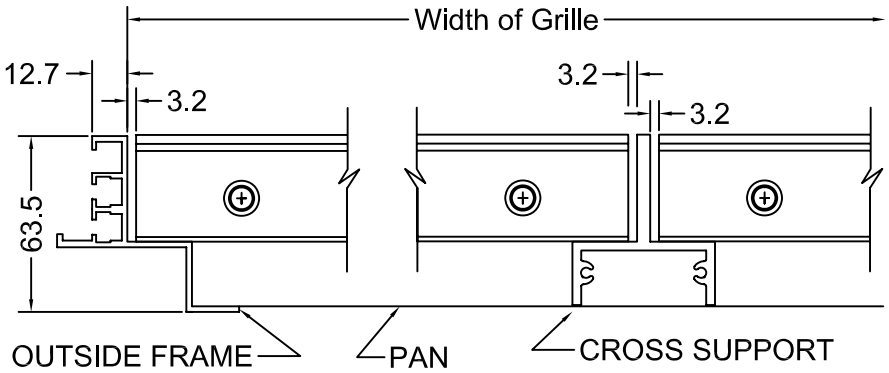

SECTION X-X

SECTION Z-Z

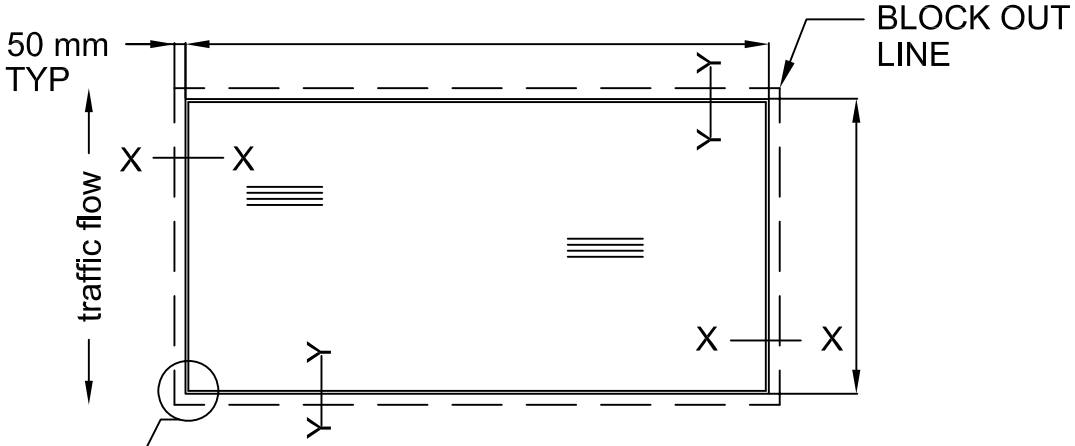

(NTS) DETAIL 1

Quantity:

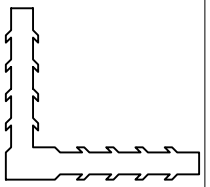

ASSEMBLY CLIP

DETAIL 1

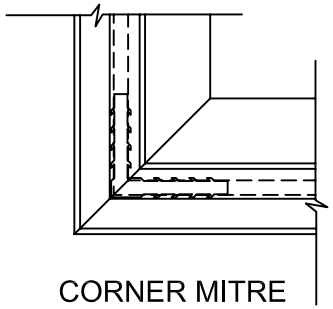

CORNER MITRE ASSEMBLY

DETAIL 2

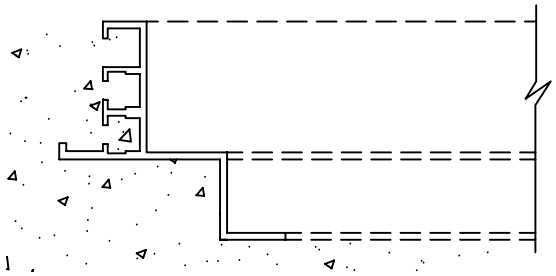

CROSS SUPPORT ASSEMBLY

GRILLES

Material : Aluminium 6061-T6
Assembly : 5/16" Steel rods
1/2" Aluminum spacers
Finish Options : ☐ Mill
☐ Clear anodized
☐ Bronze anodized
Color selection:

FRAMES Type: D

Material : Aluminum 6061-T6
Assembly : Field installed with corner clips
Finish Options: ☐ Mill
☐ Clear anodized
☐ Bronze anodized

Pan Options

☐ 20G.Gal.steel
☐ 16G.Aluminum
☐ 20G.Stainless steel

Assembly

Factory installed to inside of frame pocket

Accessories

☐ Drain
☐ Hinge
☐ Lock down

Project:	Sheet:	File #	Revision Record:	No.	By:	Date:	Approved:	McGill
Architect:	of							
Customer:	Date:	P.O.						
Rep.:								

1734 Orangebrook Court
Pickering, Ont.,L1W 3G8,Canada
Tel: 905-420-0485 / 1-888-624-4557
Fax: 905-420-4564 / 1-888-624-4558
engineering @ the-mcgill-group.com
http://www.the-mcgill-group.com